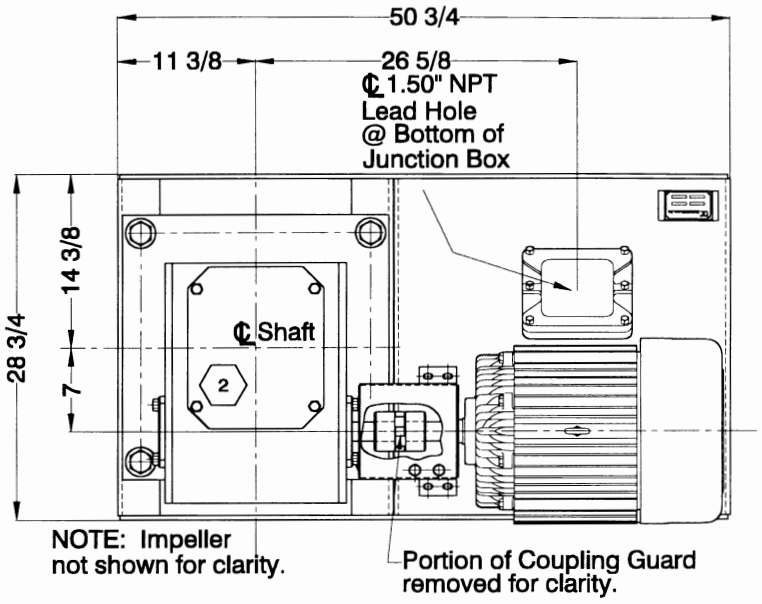

PLAN VIEW

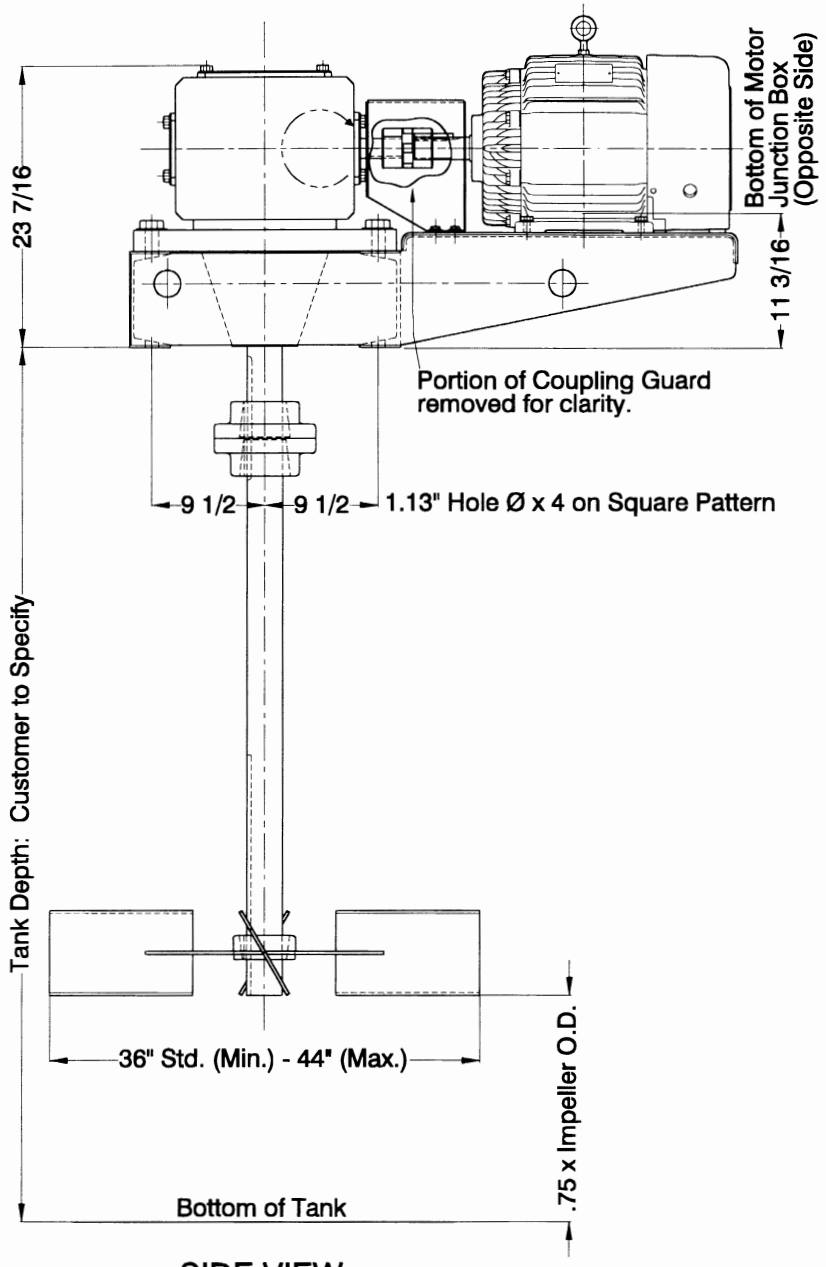

SIDE VIEW

REVISIONS			
NO.	ZONE	DESCRIPTION	BY	DATE

NOTES

1. All dimensions are in inches unless otherwise noted.

NOTICE
The information contained herein is proprietary and may not be copied or transmitted to another party without the written consent of the owner, THE DOUBLE LIFE CORP., INC.

the double life corp., inc.

TITLE

INSTALLATION DRAWING

MODEL NO. MA15-201
15 H.P. MECHANICAL AGITATOR

PART NO.	DRAWN BY	DATE	SCALE
MA15-201	JDH	4/19/01	NTS

SHEET NO.	DRAWING NO.	REV. NO.	SIZE	SEQ.
1/1	99-00315	0	A	1