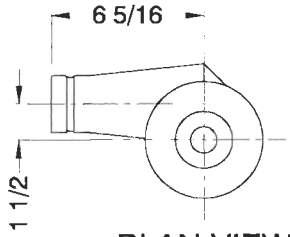


PLAN VIEW

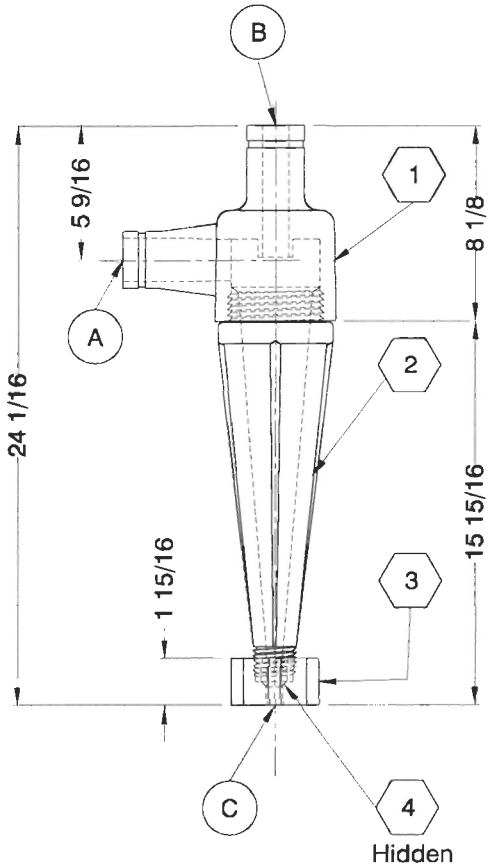


SIDE VIEW

| BILL OF MATERIALS | | | | | | |
|---|---|---|---|---|---|---|
| MARK | PART NO. | QUAN. | DESCRIPTION | LENGTH | WIDTH | WEIGHT |
| 1 | DL361 | 1 | 3" Inlet | | | 3.75 |
| 2 | DL3SC | 1 | 3" Cone Body | | | 3.50 |
| 3 | DL3AH | 1 | 3" Cone Apex Holder | | | 0.45 |
| 4 | DL3AV | 1 | 3" Cone Apex | | | 0.05 |
| | | | | | TOTAL WEIGHT | 7.75 |

| PORT SCHEDULE | | |
|---|---|---|
| MARK | DESCRIPTION | Size |
| A | Inlet | 2" Groove |
| B | Discharge | 2" Groove |
| C | Underflow | |

OPTIMUM PARTICLE SEPARATION CHART

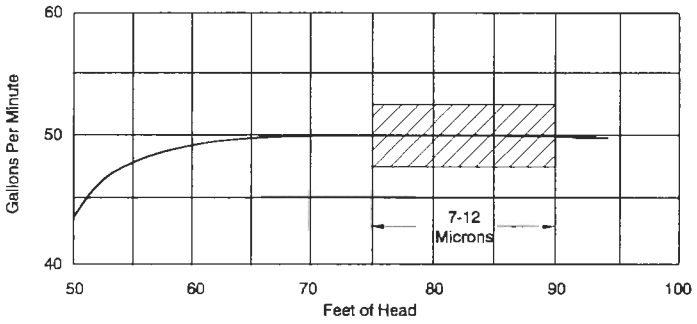


NOTE: Optimum separation is obtained when operating in shaded range.

| REVISIONS | | | |
|---|---|---|---|
| NO. | ZONE | DESCRIPTION | BY | DATE |
| | | | | |

NOTES

1. All dimensions are in inches unless otherwise noted.

NOTICE
The information contained herein is proprietary and may not be copied or transmitted to another party without the written consent of the owner, THE DOUBLE LIFE CORP., INC.

the double life corp., inc.

TITLE

CUSTOMER DRAWING
INSTALATION DRAWING &
PARTS LISTING
DOUBLE LIFE 3" CONE ASSEMBLY

| PART NO. | DRAWN BY | DATE | SCALE |
|---|---|---|---|
| DL34C | JDH | 2/13/02 | NTS |

| SHEET NO. | DRAWING NO. | REV. NO. | SIZE | SAQ. |
|---|---|---|---|---|
| 1/1 | 99-00907 | 0 | A | 1 |